Solution Brief

DataON Solutions for Microsoft Azure Stack HCI Maximize Performance for Software-Defined Storage

Simplify implementation of Azure Stack HCI for high efficiency and high performance

Intel® Select Solutions for Microsoft Azure Stack HCI

Intel® Select Solutions are designed to reduce the time required to evaluate, select, and purchase hardware for today's workloads and applications. They are vigorously benchmark-tested with today's high-priority workloads, helping businesses realize smooth deployments and optimal performance. By eliminating guesswork and ensuring predictability with pre-defined configurations, businesses can take advantage of new technologies faster.

Intel Select Solutions are powered by 2nd generation Intel® Xeon® Scalable processors. They represent a new class of Intel Xeon processors designed for demanding high-performance computing (HPC) and infrastructure-as-a-service (IaaS) workloads. In addition, they support Intel's breakthrough Intel® Optane™ DC persistent memory, delivering greater than 3TB per socket. These solutions also support Intel Optane Solid State Drives (SSDs) which can accelerate applications, reduce transactions costs for latency-sensitive workloads, and improve overall data center TCO.

Intel Select Solutions for Microsoft Azure Stack HCI are performance-optimized specifically for hyper-converged compute and storage. This solution improves performance by utilizing Intel Optane DC Persistent Memory as cache storage for Storage Spaces Direct to accelerate the cache tier for storage at DDR4 speeds versus PCIe/SATA speeds.

DataON offers four validated configurations for Intel Select Solutions for Microsoft Azure Stack HCI:

- **Data center model, base configuration** – For enterprise environments, supports primary workloads in a hybrid storage design.
- **Data center model, plus configuration** – For enterprise environments, supports the most demanding critical production workloads. Ideal for healthcare environments where electronic healthcare (EHR) database software require fast responses.
- **Edge model, base configuration** – For small-to-medium sized businesses (SMB), remote office/branch office (ROBO), and edge environments
- **Edge model, plus configuration** – For SMB, ROBO, and edge environments. Leverages leveraging Intel® Optane™ technology to support more demanding workloads such as Microsoft SQL Server.

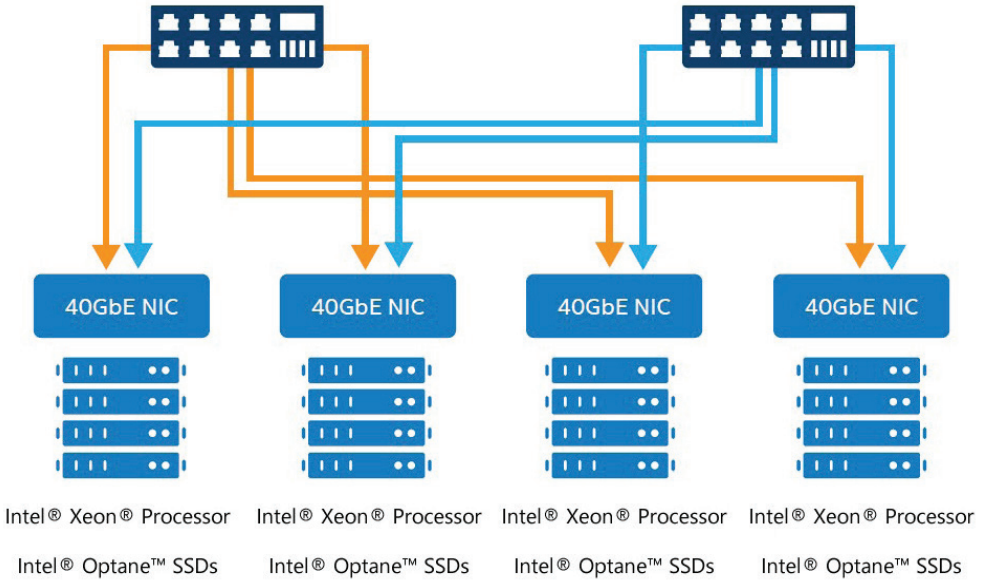

Youth VILLAGES
The force for families

"Intel® Select Solutions allows our people out in the field to use their end solutions more effectively. It provides great speed and allows them to focus on what they're really there for, to meet the needs of the young people and their families."

Cliff Reyle
Chief Human Resource and Information Officer
Youth Villages

Performance Tuned
Windows Server based HCI that counts IOPS in millions

Easy to Deploy and Manage
DataON MUST tool provides visibility, monitoring and management for Windows Server 2016 and 2019 deployments

Linear Scalability on Demand
Compute, networking and storage delivers maximum responsiveness and efficiency; supports up to 16 nodes

DataON Solutions for Azure Stack HCI

DataON solutions for Azure Stack HCI are built to optimize the full stack of Storage Spaces Direct, a feature in Windows Server 2016 and 2019. It delivers industry-leading performance for the most affordable price, providing software-defined, shared-nothing storage. Windows Server 2016 and 2019 can be used for hyper-converged deployments, where compute and storage are both on the same cluster, simplifying configuration and reducing hardware costs. Storage Spaces Direct can scale to up to 16 servers and over 400 drives, for up to 1 petabyte of storage per cluster. It also unlocks a new class of NVMe solid-state storage devices, for faster performance than SAS SSDs.

DataON solutions for Azure Stack HCI are validated by Microsoft to help get you running quickly and reliably. It features the same Hyper-V based software-defined compute, storage, and networking as Azure Stack and shares similar testing and validation criteria. It follows engineering best practices to get you up and running without lengthy design and build times.

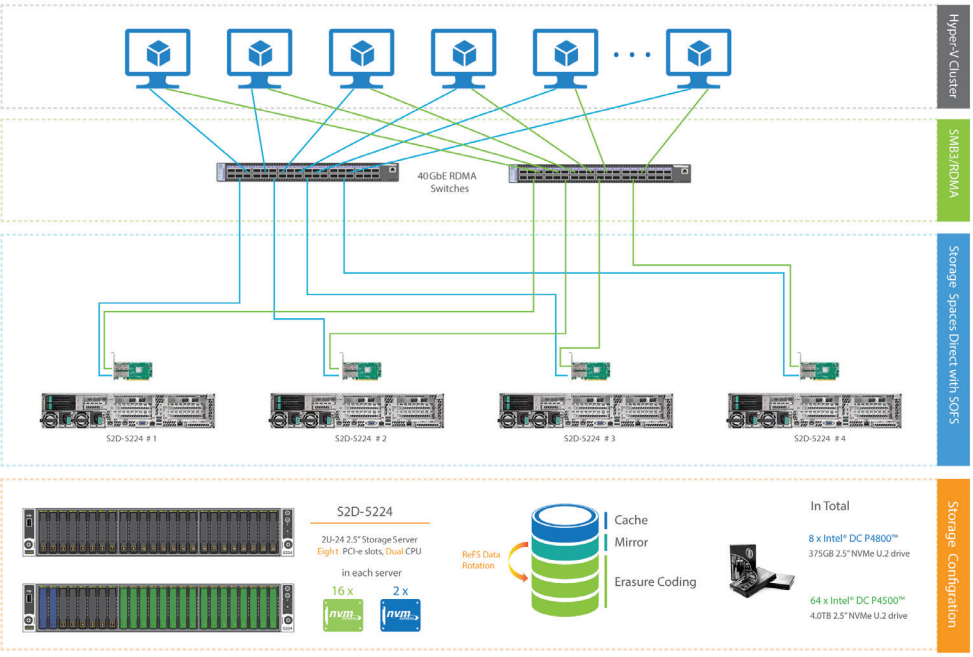

Figure 1: DataON HCI-224 Reference Design

DataON HCI-224: Optimized for IOPS & Performance

The DataON HCI-224 is a high-performance platform designed to maximize IOPS throughput. The HCI-224 is ideal for demanding in-memory applications, such as virtualization using Hyper-V, Microsoft Hekaton for analytics, Microsoft SQL, large Exchange installations, and other I/O intensive applications. The appliance can easily be combined to expand scale out services on demand with direct linear performance growth.

Volume	Filesystem	Capacity	Used	Resiliency	Size (Mirror)	Size (Parity)	Footprint	Efficiency
-n1	ReFS	18TB	3%	3-way Mirror	18TB	0	54TB	33%
-n2	ReFS	18TB	3%	3-way Mirror	18TB	0	54TB	33%
-n3	ReFS	18TB	3%	3-way Mirror	18TB	0	54TB	33%
-n4	ReFS	18TB	3%	3-way Mirror	18TB	0	54TB	33%
collect	ReFS	56GB	38%	3-way Mirror	56GB	0	169GB	33%

CSV FS	IOPS	Reads	Writes	BW (MB/s)	Read	Write	Read Lat (ms)	Write Lat
Total	3,052,082	3,051,873	209	12,507	12,502	4		
-n1	748,843	748,803	39	3,068	3,068		0.316	1.652
-n2	774,780	774,735	45	3,176	3,174	2	0.237	1.260
-n3	752,625	752,534	91	3,083	3,083	1	0.571	3.285
-n4	775,834	775,801	33	3,179	3,178		0.544	2.593

SYS	CPU (%)
Total	317
-n1	78
-n2	83
-n3	79
-n4	77

Figure 2: DataON HCI-224 Performance Benchmarks: NVMe + SSD (3-way mirror) configuration

DataON HCI Family Features

- **High Performance –** Leverages all-flash NVMe SSDs to achieve over 3.2M IOPS in a 4-node cluster.
- **Supports More VMs –** Supports 40+ Hyper-V VMs per nodes, with up to 16 nodes per cluster.
- **Highly Scalable –** Delivers compute, networking and storage resources with near-linear scalability.
- **Easy to Deploy –** Deploys easily with simple, out-of-the-box installation.
- **Easy to Manage –** Includes DataON MUST™ infrastructure visibility and management tool.

2nd Generation Intel Xeon Scalable Processors and NVMe Express (NVMe) – Leverages the latest technology to deliver incredible performance and responsiveness, with greater VM density.

Preconfigured 4-node Hyper-Converged Clusters – Scalable to up to 16 nodes, to provide expanded capacity and operational flexibility.

Industry-Leading Application Performance – Provides over 3.2M IOPS performance (running VM Fleet) using the all-flash NVMe SSD technology to scale IOPS-intensive workloads.

Breakthrough performance and dramatically reduced disk latency – Intel Optane SSDs that are NVMe-based are available for the fast cache tier.

Hyper-V Virtualization Hosting – Supports more than 40 Hyper-V virtual machines per node, with up to 16 nodes per cluster.

Storage and Networking with SMB3 over RDMA – Increases CPU efficiency while delivering the lowest network latency and 2x throughput compared to TCP/IP.

Hyper-Converged Scalability – Delivers incremental compute, networking, and storage resources while providing near-linear scalability. Each node can be expanded via 12GB/s SAS JBODs.

Automated Out-of-the-box Deployment – Accelerates time to deployment for Windows Server 2016 and 2019 Storage Spaces Direct and Storage Replica environments.

Integrated Data Protection and Guarded Fabric – Supports Windows Server with Shielded VM and TPM 2.0 trusted attestation for security and business continuity.

Form Factor	2U 24-bay 2.5"
Appliance Node	2U Server cluster with 4 nodes
Windows Server 2016 and 2019 Hyper-Converged Infrastructure	2nd Generation Intel® Xeon® Scalable processors
Hyper-V Deployment	150-1500 VMs (scale to 224 physical cores and 18 DIMMs per CPU)
Storage Pool Allocated Capacity	20-150TB (3-way mirror [33%] or RS 2+2 {47% efficiency] MRV erasure coding)
Performance	3M IOPS (100% read); 1.5M IOPS (70/30 read-write)
Networking Fabric	SMB3 over RDMA; 10/40 GbE RDMA NIC
Memory Slot	24x DDR4 DIMMs per node
Expansion Slot	7x PCIe 3.0; x8 per node
Management	DataON MUST visibility, monitoring and management tool

DataON MUST Highlights

- Provides multiple tiers of storage visibility and monitoring
- Dashboard-level metrics from a single pane of glass
- Available standalone or Integrates natively with Windows Admin Center for a seamless experience from a central console
- Delivers unique features and functionalities that enhance the Windows Admin Center experience, including historical data reporting, disk mapping, system alerts, and call-home service

The DataON Difference

DataON is exclusively focused on customers who have made the "Microsoft choice" to deploy a Windows Server-based storage solution. It has been named to CIO Review's '20 Most Promising Microsoft Solution Providers 2018.' Our team of Microsoft experts know how to design, deploy and support Windows Server storage and will work with you to performance tune your workloads with benchmarks. DataON solutions are:

- Customer-proven with over 650 enterprise deployments and greater than 150PB of Storage Spaces Direct deployments.
- Certified for Microsoft Azure Stack HCI and the Windows Server Software-Defined (WSSD) program, for the highest level of performance, manageability, and security offered.
- Certified for Windows Server 2016 and 2019 Server Software-Defined Datacenter (SDDC) Premium and Standard editions. Certified for Windows Server 2012, 2012 R2, 2016, and 2019.

DataON MUST and Windows Admin Center: Infrastructure Visibility and Management for Windows Server 2016 and 2019

Windows Admin Center is a new, locally-deployed, browser-based management tool set that lets you manage your Windows Servers with no Azure or cloud dependency. Windows Admin Center gives you full control over all aspects of your server infrastructure and is particularly useful for managing servers on private networks that are not connected to the Internet.

Windows Admin Center is the modern evolution of "in-box" management tools, like Server Manager and MMC. It complements System Center and Operations Management Suite and it can be used with valid licenses of Windows Server or Windows 10 at no additional cost.

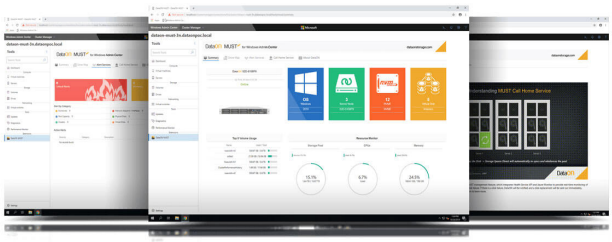

DataON MUST (Management Utility Software Tool) provides advanced cluster monitoring, performance metrics, system health statistics, and automated system alerts for Windows Server-based hyper-converged systems, networking and storage. Built to support Microsoft's suite of software-defined storage technologies, including Storage Spaces Direct, Storage Replica and Storage Quality-of-Service (QoS), MUST simplifies data center management and helps enterprise customers transition from traditional SANs to a Windows Server-based hyper-converged infrastructure.

MUST complements Windows Admin Center by providing additional features such as historic data reporting, disk mapping, system alerts, and SAN-like call home service.

CIO Review 20 MOST PROMISING MICROSOFT SOLUTION PROVIDERS - 2018

www.dataonstorage.com

sales@dataonstorage.com

1.714.441.8820

About DataON

DataON DataON is a hybrid cloud computing company focused on delivering Microsoft Azure Stack HCI solutions, on-premises storage systems, intelligent edge appliances, and cloud-based Microsoft Azure Services. Our company is helping enterprises and customers who have made the "Microsoft choice" to modernize their IT with Microsoft applications, virtualization, and data protection through a complete and turnkey experience. With over 650 HCI clusters and 150PB of storage deployed, DataON enterprise-level solutions are designed to provide the highest level of performance, manageability, and security offered. DataON is a Microsoft Gold Partner, Microsoft Cloud Service Provider (CSP), and an Intel Platinum Partner.